United States Patent [19]

Ridings et al.

[11] **Patent Number: 4,941,483**

[45] **Date of Patent: Jul. 17, 1990**

[54] **AEROSOL DELIVERY ARTICLE**

[75] Inventors: **Henry T. Ridings**, Lewisville; **Chandra K. Banerjee**, Pfafftown, both of N.C.

[73] Assignee: **R. J. Reynolds Tobacco Company**, Winston-Salem, N.C.

[21] Appl. No.: **410,191**

[22] Filed: **Sep. 18, 1989**

[51] Int. Cl.[5] **A24D 1/00; A24D 1/18**

[52] U.S. Cl. **131/194**; 131/271; 131/273; 131/360; 128/200.14

[58] Field of Search 131/194, 270, 271, 273, 131/360, 359; 128/200.14

[56] **References Cited**

U.S. PATENT DOCUMENTS

2,104,266	1/1938	McCormick .	
3,258,015	6/1966	Ellis et al. .	
3,683,936	8/1972	O'Neil, Jr. .	
4,149,548	4/1979	Bradshaw .	
4,284,089	8/1981	Ray .	
4,393,884	7/1983	Jacobs .	
4,774,971	10/1988	Vieten .	

FOREIGN PATENT DOCUMENTS

276250	6/1967	Australia .
86/02528	5/1986	PCT Int'l Appl. .

Primary Examiner—V. Millin

[57] **ABSTRACT**

An aerosol delivery article provides flavor or a dose of a drug by heating a flavor or a drug, but not burning any material. A heat source which includes granular magnesium, granular iron, and finely divided cellulose generates heat upon contact thereof with an aqueous solution of potassium chloride. The heat source is in a heat exchange relationship with the flavor or drug. Heat generated by the heat source heats the flavor or drug in a controlled manner. The flavor or drug volatilizes and is drawn into the mouth of the user of the article. Typical heat sources heat the flavor or drug to a temperature within about 70° C. to about 180° C. for 4 to 8 minutes.

23 Claims, 2 Drawing Sheets

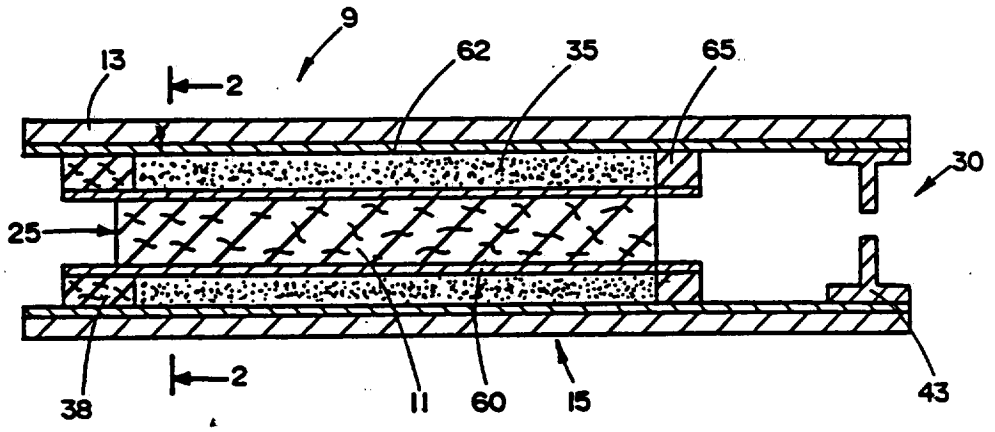

2021391973

RECEIVED
PHILIP MORRIS MANAGEMENT CORP.
LAW DEPT.—PATENT SECTION

JUL 23 1990

Source: https://www.industrydocuments.ucsf.edu/docs/fjml0000